Connection wall sleeve

3030300004

- **integrated flange connection**
- **pressure-sealed after concrete curing**

For the direct connection of a smooth duct DN 110 with plug-in/glue-in socket.

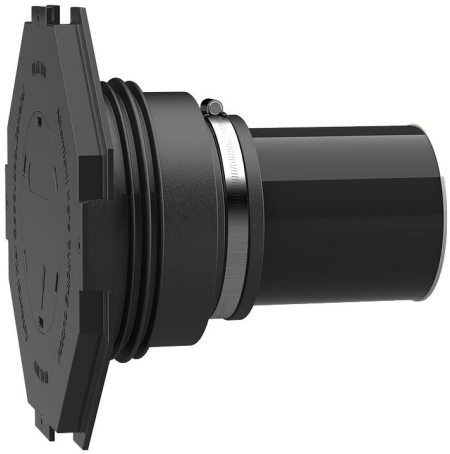

Picture may differ from selected product

FACTS

Advantages:

- For the direct connection of a plug-in/glue-in socket DN 110
- Available adapted to wall thickness ready for installation

Scope of delivery:

- 1 piece of rubber sleeve with integrated 3-ribbed seal
- 1 piece of clamping strap
- 1 piece of sleeve cover with flange connection and blind cover for tapping in
- 1 piece of wall sleeve
- 1 piece of plastic pipe DN 110 (everything pre-mounted ready for installation)

Properties:

- for installation flush with the formwork
- Blind sealed ready for installation

Application range:

- Water exposure class DIN 18533: W1-E and W2.1-E
- Waterproof concrete stress class 1, waterproof concrete stress class 2

Material:

- Rubber sleeve: EPDM
- Sleeve cover: ABS
- Clamping strap: Steel St sn (W1)
- Closing cover: PE
- Pipe: PVC-U

Tightness:

- gastight and watertight
- radon tight

FEATURES

Wall sleeve ID (mm):	100
Wall sleeve OD (mm):	110
:	260
wall thickness (mm):	200
Packing unit:	5

PICTURES

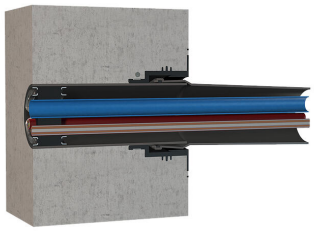

Hauff-Technik GmbH & Co. KG
Robert-Bosch-Straße 9
89568 Hermaringen, GERMANY

Tel. +49 7322 1333-0
Fax +49 7322 1333-999

office@hauff-technik.de